GAS STOVES

REGENCY®
FIREPLACE PRODUCTS

www.regency-fire.com

GAS STOVES

Why choose Regency?

Beautiful Home Heating Solutions

Regency Fireplace Products was founded over 30 years ago with a mission to produce the finest fireplace products available anywhere. Regency has home heating solutions for any room in any home. Listening to our customer has enabled us to become the premium brand in the market today.

Regency Quality

The Regency name means quality in every way. The product is created and built in a world class manufacturing facility focused on getting every detail just right. Represented across North America by a carefully selected professional retail network; you can rely on knowledgeable dealers and installers who understand how to make our products run safely and to the optimum performance.

Exceptional Fire

The essence of each and every Regency stove is the unique flame. Without question, it's the best in the industry. With its dancing flames and glowing embers, the Regency fire looks just like a wood fire.

Save with Zone Heating

The best way to cut home heating costs is to turn your furnace down and enjoy the warmth of a Regency fire in the rooms where you spend quality time. Regency Gas Stoves produce consistent, controllable heat.

Lifetime Warranty

I am so confident in the quality workmanship, the finest materials and durable heavy-duty construction invested in each and every product, that I offer a Limited Lifetime Warranty. The Regency warranty is the best in the industry. We are absolutely sure that you will be as proud of your Regency Gas Stove as we are – I guarantee it.

Robert Little

Robert Little
Founder & CEO

Index

Regency Gas Stoves

Ultimate U38/U39 4

Classic C34 6

Technical specs 8

Ultimate U38/U39

Gas Stove

The clean lines of the Ultimate Gas stove wrap around its extraordinary fire. Your Ultimate fire can be turned up as high as 40,000 BTU providing high efficiency heat or turned down to 20,000 BTU to enjoy the fire view with less heat. Replace your old woodstove, install into your existing masonry fireplace or warm up your kitchen, bedroom or den as you lower heating bills.

Standard Features

- Beautiful fire with glowing logs and platinum bright and embaglow embers
- Black steel pedestal
- Pedestal side panels
- Flame height adjustment with up to 50% turn down
- Variable speed blower
- Natural gas

Optional Features

- 1-piece wrap around door in gold, brushed nickel or black
- Gold, brushed nickel or black louvers
- FireGenie® Remote Control
- Wall thermostat
- Vertical or horizontal direct vent terminations (U39)
- AstroCap™ Venting System (U39)
- Available in B-vent (U38) or direct vent (U39)
- Propane conversion kit
- BTU reduction kit

Specifications

	U38 B-vent		U39 Direct Vent	
	Natural Gas	Propane	Natural Gas	Propane
Input (BTU)	40,000	38,000	38,000	38,000
Turn Down to (BTU)	21,000	20,000	20,000	20,000
EnerGuide Rating*	58.61%	60.31%	69.41%	69.41%
Efficiency (steady state)	74%	75%	84%	86%

* for Canada only

U39 with wrap around black door and black louvers.

U39 with wrap around black door and gold louvers.

Ultimate U39 gas stove with wrap around nickel door and louvers

See it burn
regency-fire.com

Classic C34

Gas Stove

The Regency Classic Gas Stove mirrors the authentic styling of a woodstove with all the convenience of gas. No Chimney? No Problem. With the direct vent option, you can vent up and out of your home saving installation dollars. Certified as heating appliances, all Regency gas stoves provide consistent, controllable heat, even during power outages.

Standard Features

- Beautiful fire with glowing logs and platinum bright and embaglow embers
- Heavy-duty ceramic safety glass
- Flame height adjustment with up to 50% turn down
- Convector airmate
- Direct vent
- Natural gas or propane

Optional Features

- Cast iron door in black** or nickel accent
- Cast iron legs in brushed nickel or black
- Bottom heat shield (when using legs)
- Black steel pedestal base
- FireGenie® Remote Control
- Vertical or horizontal direct vent terminations
- AstroCap™ Venting System
- Wall thermostat
- 2-speed blower

Specifications

	Natural Gas	Propane
Input (BTU)	32,000	32,000
Turn Down to (BTU)	16,000	16,000
EnerGuide Rating*	62.51%	62.51%
Efficiency (steady state)	84%	83%

* for Canada only

** black doors come with nickel handles & nickel hinge caps

Classic C34 featuring black legs and black door.

See it burn
regency-fire.com

C34 with nickel accent door and black pedestal.

C34 with black door and black cast iron legs.

C34 with black door and brushed nickel legs.

Regency® Gas Stoves are versatile, efficient heaters that add comfort to your home. Enjoy the unique style of a freestanding stove with the convenience of gas and reduce your heating bills.

Direct Vent Technology

Direct vent technology means that you can install a Regency stove almost anywhere in your home - no chimney is needed. From the top of the unit, simply vent your stove through an exterior wall. Direct vent means that you have sealed combustion – outside air is brought in through the vent for combustion and the used air is sent back out – your indoor air is not affected.

Comfort Controls

Control your comfort with a Regency remote or thermostat designed to help you manage your home heating.

Turn your fire on and off with a FireGenie® remote control exclusive to Regency. The FireGenie can be used as a thermostat, allowing you to set and automatically maintain a desired temperature. Every FireGenie features a timer, clock and backlit LCD display.

A Regency wall thermostat is a hands free solution to maintaining a constant temperature in your home. Choose the programmable wall thermostat and set different temperatures throughout the day to match your lifestyle. Wake up to warmth!

Specifications

C34

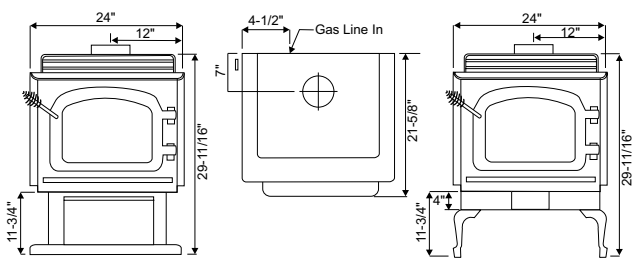

U38 & U39 FRONT

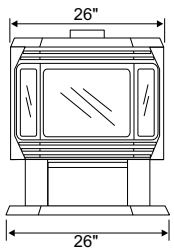

U38 & U39 SIDE

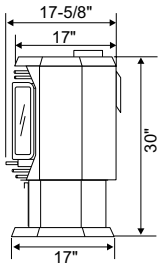

VENTING OPTIONS

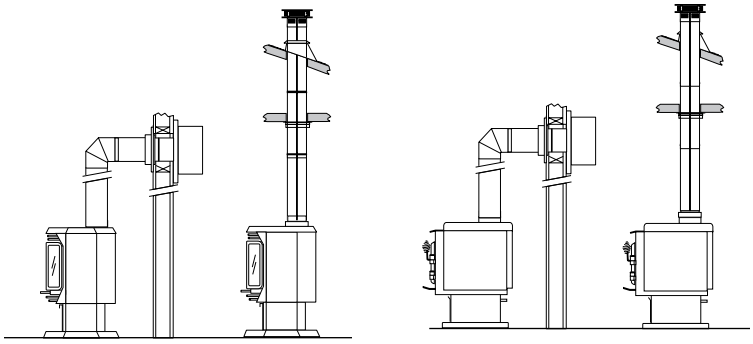

U39 only U38 & U39 C34 C34

CLEARANCES TO COMBUSTIBLES

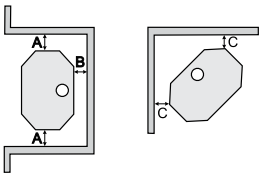

	A Side Wall to Unit	B Back Wall to Unit	C (corner) Side Wall to Unit
U38 B-vent	7-1/2"	6"	2"
U39 DV Top	7-1/2"	6"	2"
C34 DV	10"	6"	1-1/2"

B*- Rear wall clearance is a temperature issue and necessary for drafting purposes. Do not reduce clearance under any circumstances.

www.regency-fire.com

Your Regency Dealer

Canada
ENERGUIDE
Look for the **EnerGuide** Gas Fireplace Energy Efficiency Rating in this brochure
Based on CSA P.4.1-02

FSC www.fsc.org MIX Paper from responsible sources FSC® C

© 2014 FPI Fireplace Products International Ltd. Regency, AstroCap and FireGenie are the registered and/or proprietary trademarks of FPI Fireplace Products International Ltd. Printed in Canada (06/14)
Part no. 944-220