L390PB Gas Insert

Model	L390PB-NG2	L390PB-LP2
Fuel Type	Natural Gas	Propane
Minimum Supply Pressure	5" W.C. (1.25 kPa)	11" W.C. (2.73 kPa)
Manifold Pressure - High	3.5" W.C. (0.87 kPa)	10" W.C. (2.48 kPa)
Manifold Pressure - Low	1.6" W.C. (0.41 kPa)	6.4" W.C. (1.59 kPa)
Orifice Size -**Altitude 0-4500 ft.**	#35 DMS	#53 DMS
Minimum Input **Altitude 0-4500 ft. (0-1372m)**	22,000 BTU/h (6.45 kW)	26,000 BTU/h (7.62 kW)
Maximum Input **Altitude 0-4500 ft. (0-1372m)**	31,000 BTU/h (9.09 kW)	31,000 BTU/h (9.09 kW)
Vent Sizing	3"x 3" Co-linear (Standard) 2"x 3" Co-linear (Optional)	3"x 3" Co-linear (Standard) 2"x 3" Co-linear (Optional)

Approved Venting Systems	
Flex Vent Systems:	**FPI AstroCap™ Flex Vent**

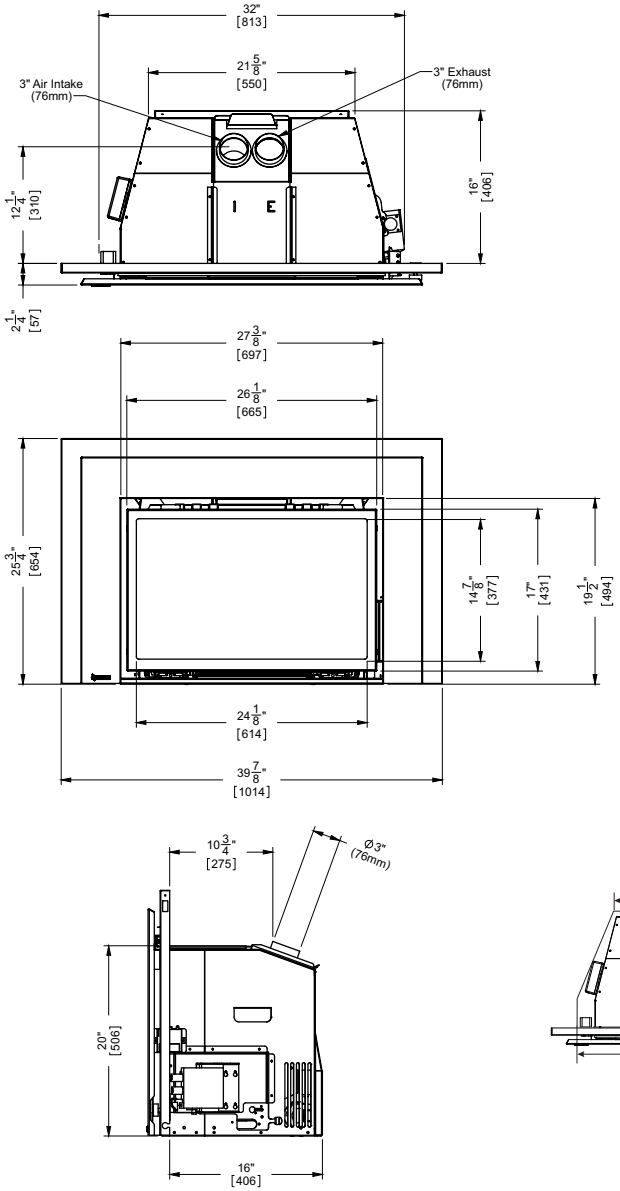

MINIMUM FIREPLACE DIMENSIONS

	Max Lentil Bar Depth A	Height B	Overall Depth C	Width (rear) D	Width (front)* E	Front Depth (prior to taper) F[1]	Width (front)* G	Front Depth (prior to taper) F[2]	Front Depth H
Low Profile Face-plate	10"	20"	16-1/8"	22"	32"	5-1/2"	33	3-1/2"	36"

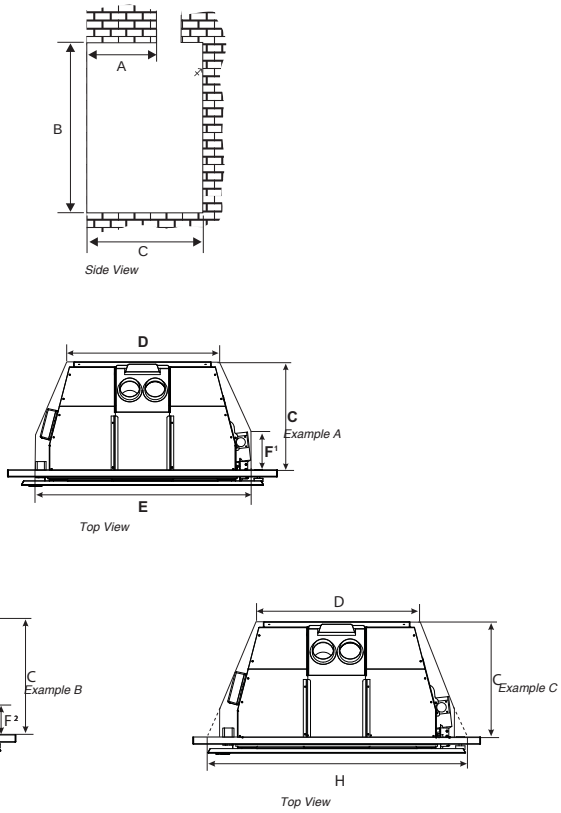

L390PB Gas Insert

MINIMUM CLEARANCES TO COMBUSTIBLES

The clearances listed below are Minimum distances unless otherwise stated:

A major cause of fires is failure to maintain required clearances (air space) to combustible materials. It is of the greatest importance that this decorative gas appliance be installed only in accordance with these instructions.

Clearance:	Dimension	Measured From:
A: Sides	6" / 152 mm	From inside edge of faceplate / doors
B: Ceiling	60" / 1524 mm	From top of unit
C: Mantel (Min. Height)	*12" / 305mm 15" / 381mm	From top of unit, or 32" from bottom of unit From top of unit, or 35" from bottom of unit
D:Min. Hearth Width	14" / 356mm	
E: Min. Hearth Length	40"/ 1016mm	
G: Max. Mantle Depth	**0 -**12" / 305 mm	@ 44" (1118mm) from bottom of unit
K: Min. Alcove Width	54" / 1372 mm	
L: Max. Alcove Depth	36" / 914 mm	
M: Mantel Deflector	3-1/2"/ 89mm	

NOTE: 40" (1016MM) wide x 14" (356mm) deep hearth is required, unless the unit is raised 6" (152.4 mm) off the floor surface.
***An optional 3-1/2" deflector, reduces the mantel height to 32" from bottom of unit @ 1"depth.**

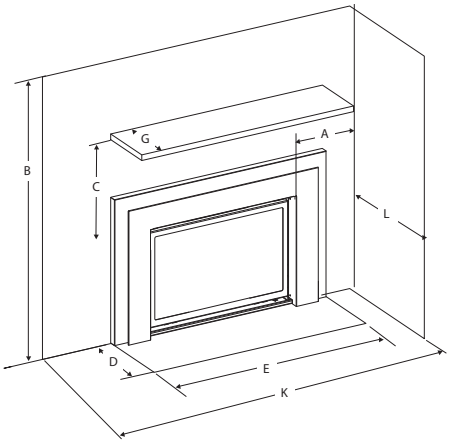

Diagram 1

MANTEL CLEARANCES WITHOUT DEFLECTOR

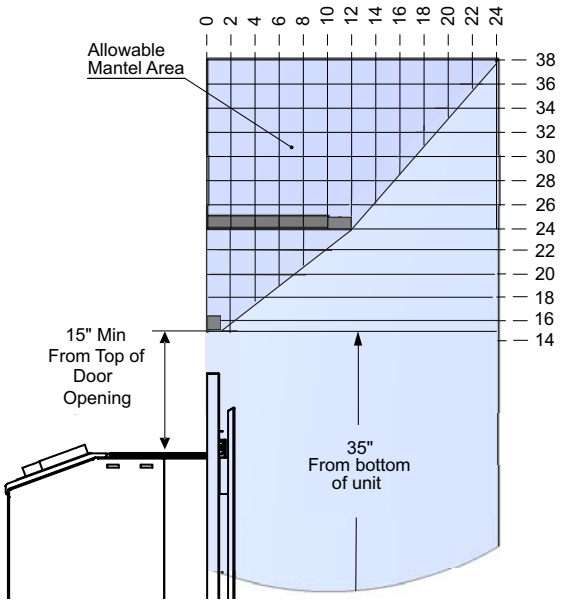

Diagram 2

MANTEL CLEARANCES WITH 3-1/2" DEFLECTOR

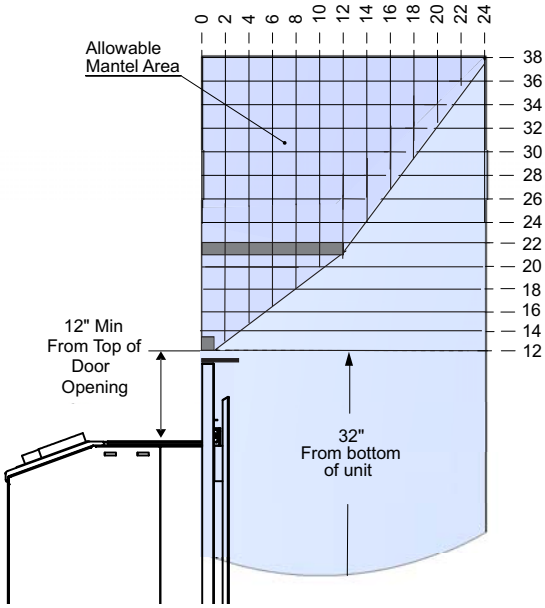

Diagram3

WARNING
Although this appliance passes safety certification, the hearth in front of the fireplace becomes very hot when the fireplace heats. Do not use the hearth as a seat or shelf.

Note: A 3-1/2" mantel deflector to reduce mantel height to 32" from bottom of unit @ 1"depth.

A noncombustible mantel may be installed at a lower height if the framing is made of metal studs covered with a noncombustible board.