# Regency U32 Sunrise Gas Insert

*U32S Sunrise Gas Insert*

| Model | U32S-NG | U32S-LP |
|---|---|---|
| Fuel Type | Natural Gas | Propane |
| Minimum Supply Pressure | 5” W.C. (1.25 kPa) | 12” W.C. (2.99 kPa) |
| Manifold Pressure - High | 3.5” W.C. (0.87 kPa) | 10” W.C. (2.48 kPa) |
| Manifold Pressure - Low | 1.6” W.C. (0.41 kPa) | 6.4” W.C. (1.59 kPa) |
| Orifice Size -**Altitude 0-4500 ft.** | #42 DMS | #54 DMS |
| Minimum Input **Altitude 0-4500 ft. (0-1372m)** | 16,500 BTU/h (4.84 kW) | 17,000 BTU/h (4.98 kW) |
| Maximum Input **Altitude 0-4500 ft. (0-1372m)** | 24,500 BTU/h (7.18 kW) | 20,500 BTU/h (6.01 kW) |
| **Vent Sizing** | 3” Co-linear | 3” Co-linear |

| Approved Venting Systems | |
|---|---|
| **Flex Vent Systems:** | **FPI AstroCap™ Flex Vent** |

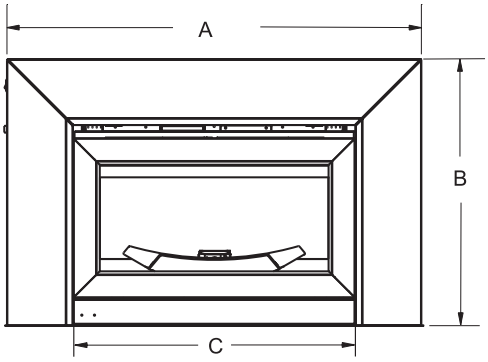


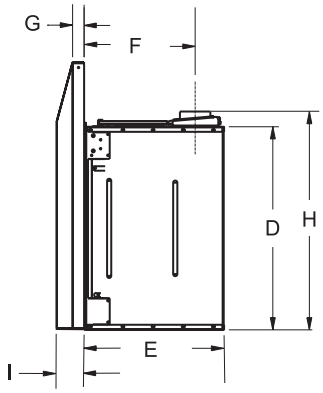


| Dimension | Description | U32S |
|---|---|---|
| A | Faceplate Width | 40-13/16” (1037mm) |
| B | Faceplate Height | 26-1/4” (667mm) |
| C | Unit Width | 27-7/8” (708mm) |
| D | Unit Height | 20” (508mm) |
| E | Unit Depth | 13-13/16” (351mm) |
| F | Faceplate to Vent Centerline | 10-15/16” (278mm) |
| G | Faceplate Depth | 1-1/8” (28mm) |
| H | Height to Vent Collar | 21-1/2” (546mm) |
| I | Faceplate Depth | 2-11/16” (68mm) |

## Minimum Fireplace Dimensions

The minimum fireplace clearances & dimensions for the FPI gas insert are shown in the following diagrams:

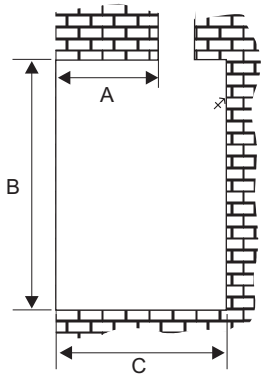


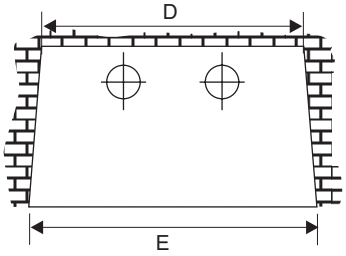


| Max. Lentil Bar Depth A | Height B | Depth C | Width (rear) D | Width (front) E |
|---|---|---|---|---|
| **9"** | **22"** | **14"** | **22-1/2"** | **26-1/2"** |

*U32S Sunrise Gas Insert*

## Clearances

Unless otherwise stated the clearances listed below are Minimum distances to combustible materials. **Please Note: A major cause of chimney related fires is due to a failure to maintain required clearances (air space) to combustible materials. It is of the greatest importance that this fireplace and vent system be installed only in accordance with these instructions.**

| Clearances to Combustibles | | |
|---|---|---|
| **Dimension** | **Description** | **U32S** |
| A | From Unit to Side Walls | 10” (255mm) |
| B | From Unit to Ceiling | 47.5” (1205mm) |
| C | Minimum Mantel Height | 13” (330mm) |
| G | Maximum Mantel Depth | 12” (305mm) |
| K | Alcove Width | 48” (1220mm) |
| L | Alcove Depth | 36” (914mm) |

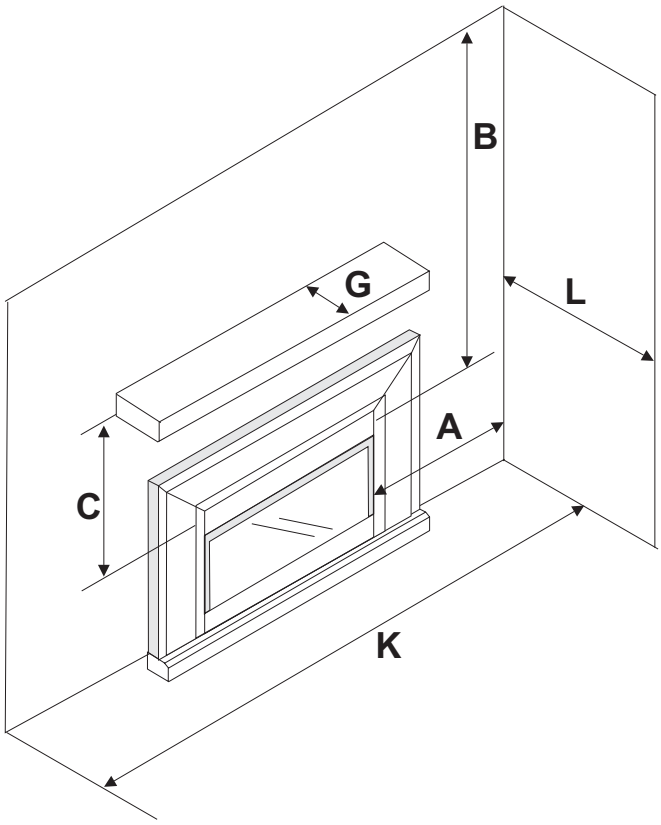


## Combustible Mantels

**Because of the extreme heat this fireplace emits, the mantel clearances are critical.** Mantel may be installed anywhere in the shaded area or higher.

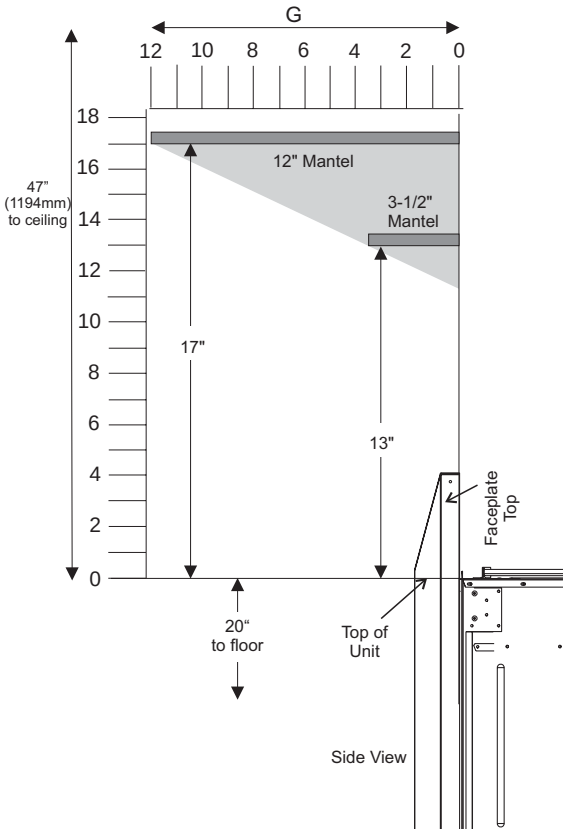


**Note: A non-combustible mantel may be installed at a lower height if the framing is made of metal studs covered with a non-combustible board.**

**Note: Ensure the paint that is used on the mantel and the facing is "heat resistant" or the paint may discolour.**